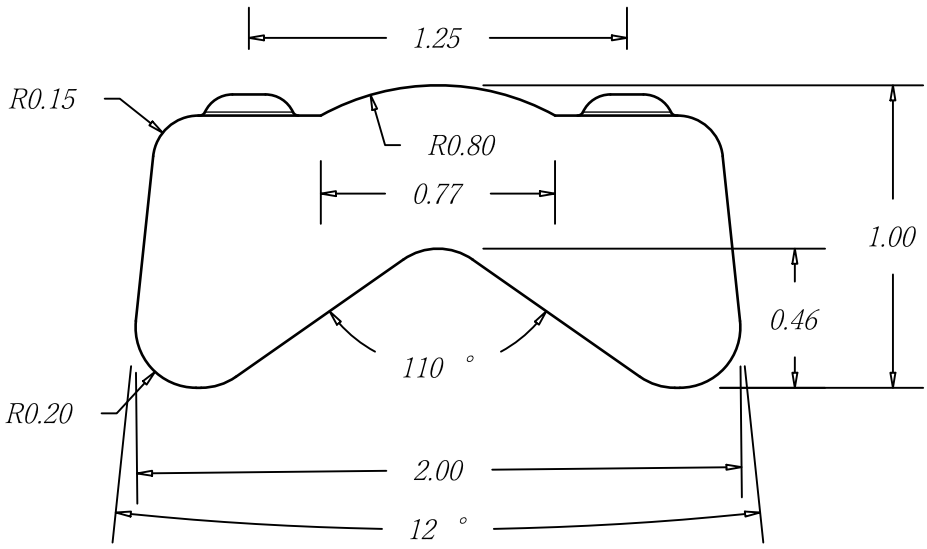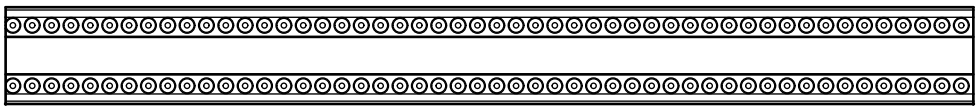
1.25
R0.15
R0.80
0.77
1.00
0.46
110 °
R0.20
2.00
12 °